BM1 HYDRAULIC MOTOR

Dimensions - inches (mm)

Standard type ports

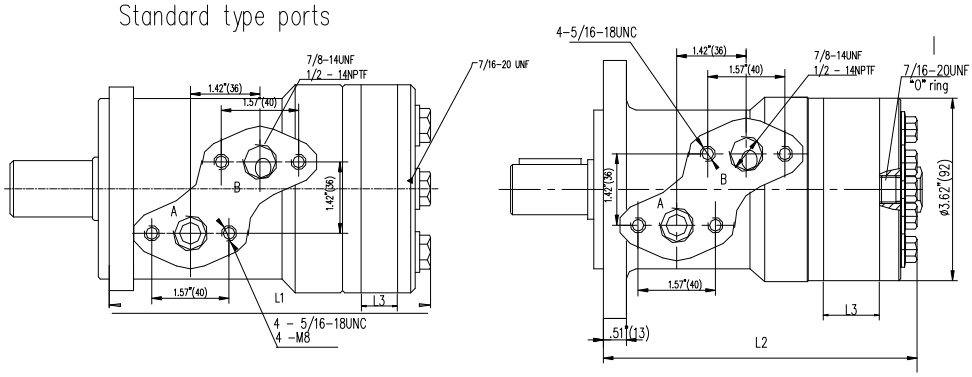

Other shafts ....

BM1 L inch (mm)

Displ. in^3/r	3.05	3.84	4.88	6.10	7.63	9.76	12.20	15.25	19.22	24.41
(ml/r)	50	63	80	100	125	160	200	250	315	400
L1 inch	5.62	5.73	5.75	5.87	6.02	6.22	6.46	6.75	7.15	7.64
(mm)	143	145.5	146	149	153	158	164	171.5	181	194
L2 inch	5.55	5.65	5.67	5.79	5.94	6.14	6.38	6.67	7.07	7.56
(mm)	141	143.5	144	147	151	156	162	169.5	179.5	192
L3 inch	0.35	0.45	0.47	0.59	0.75	0.94	1.18	1.48	1.87	2.36
(mm)	9	11.5	12	15	19	24	30	37.5	47.5	60

Horizontal type ports

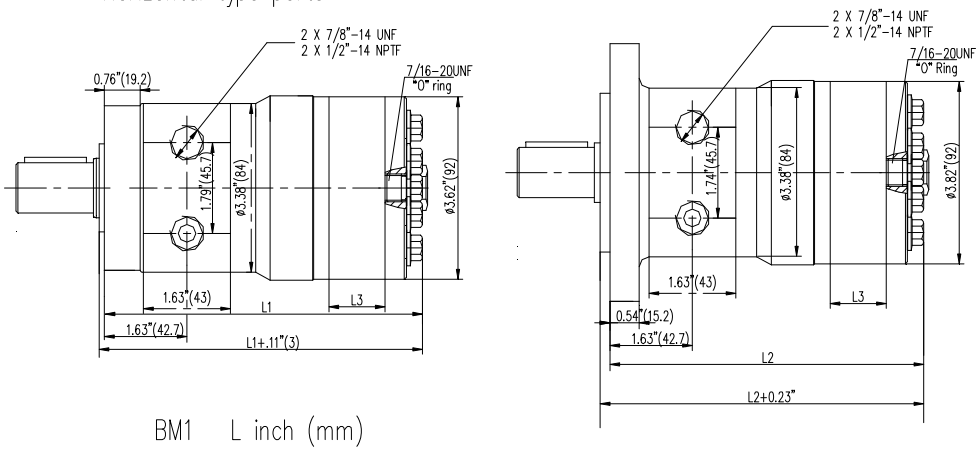

BM1 L inch (mm)

Displ. in^3/r	3.05	3.84	4.88	6.10	7.63	9.76	12.20	15.25	19.22	24.41
(ml/r)	50	63	80	100	125	160	200	250	315	400
L1 inch	5.47	5.57	5.53	5.78	5.86	6.06	6.23	6.53	6.94	7.43
(mm)	139	141.5	142	145	149	154	160	167.5	177.5	190
L2 inch	5.33	5.43	5.51	5.63	5.73	5.93	6.22	6.51	6.98	7.47
(mm)	137	139.5	140	143	147	152	158	165.5	175.5	188
L3 inch	0.35	0.45	0.47	0.59	0.75	0.94	1.18	1.48	1.87	2.36
(mm)	9	11.5	12	15	19	24	30	37.5	47.5	60

BM1 HYDRAULIC MOTOR

Mounting flange dimensions and codes - inches (mm)

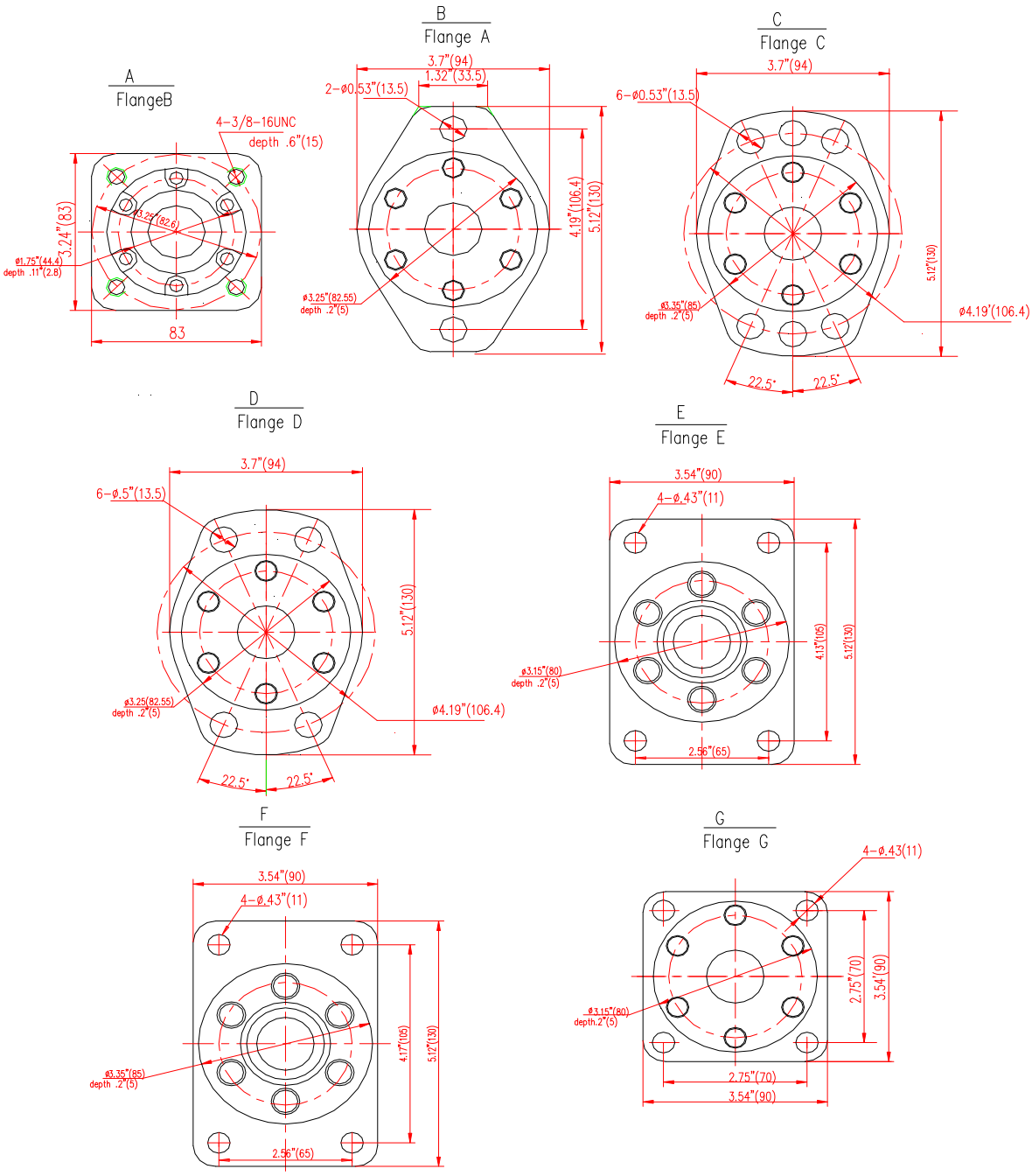

BM1 HYDRAULIC MOTOR

Shafts dimension and codes - inches (mm)

shaft K

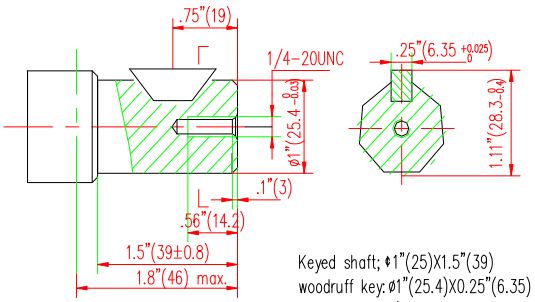

Keyed shaft; ⌖1"(25)X1.5"(39)
woodruff key: ø1"(25.4)X0.25"(6.35)
link thread :1/4-20UNC

shaft L

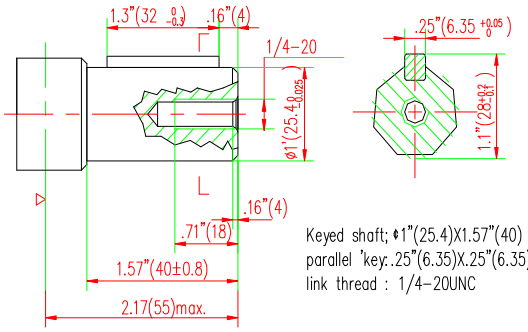

Keyed shaft; ⌖1"(25.4)X1.57"(40)
parallel 'key:.25"(6.35)X.25"(6.35)X1.26"(32)
link thread : 1/4-20UNC

shaft M

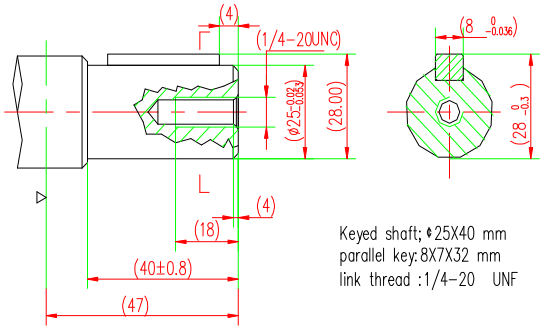

Keyed shaft; ⌖25X40 mm
parallel key: 8X7X32 mm
link thread :1/4-20 UNF

shaft N

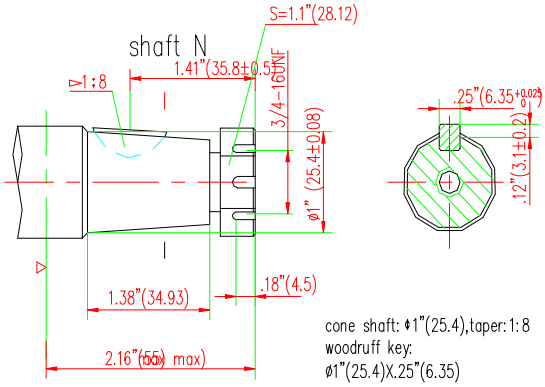

cone shaft: ⌖1"(25.4),taper:1:8
woodruff key:
ø1"(25.4)X.25"(6.35)

shaft P

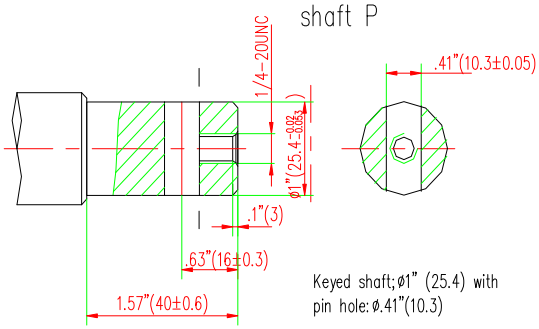

Keyed shaft; ø1" (25.4) with
pin hole: ø.41"(10.3)

shaft S

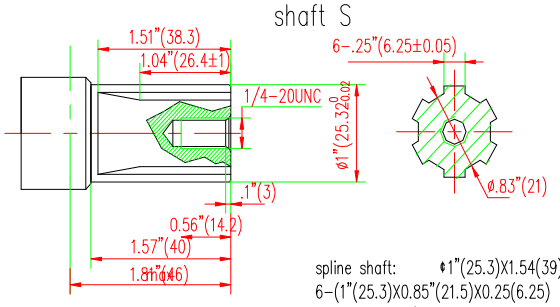

spline shaft: ⌖1"(25.3)X1.54(39),
6-(1"(25.3)X0.85"(21.5)X0.25(6.25)
link thread :1/4-20UNC

shaft T

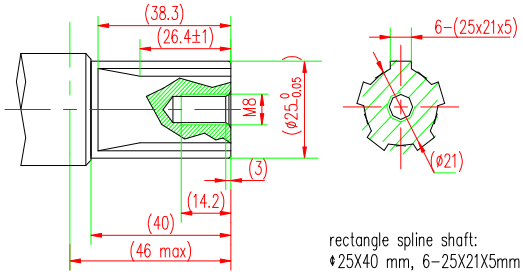

rectangle spline shaft:
⌖25X40 mm, 6-25X21X5mm
link thread :M8 mm

shaft U

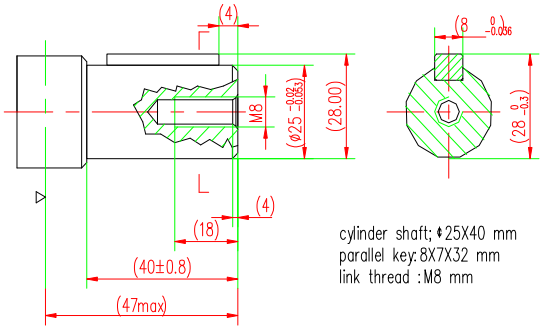

cylinder shaft; ⌖25X40 mm
parallel key: 8X7X32 mm
link thread :M8 mm